SMARTCAP

SUPER DUTY
EDGE DEFENDER

Assembly Guide

Contact us at **SUPPORT.NA@SMARTCAP.COM**

SMARTCAP.COM

COMPONENTS

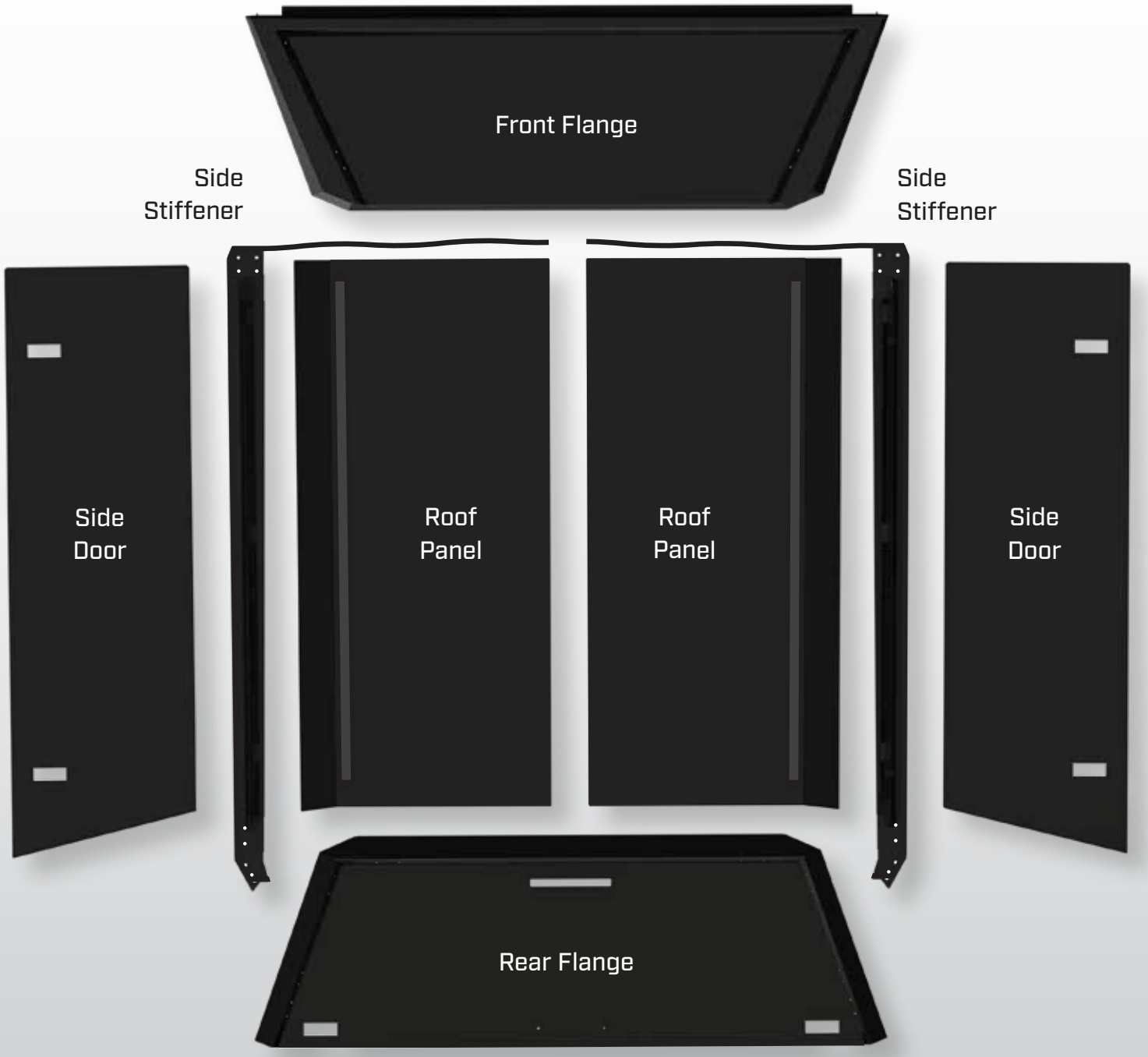

Inspect each of the components, if any manufacturing imperfections or shipping damages are found, stop the assembly and contact us at **support.na@smartcap.com**

Edge caps now include improved Roof Panel Channels with Rivnuts to facilitate seamless Gullwing bin installation. In early production runs Roof MOLLE Panels were included, however your cap will likely **not include** them as a feature.

TOOLS REQUIRED

- ☐ 10mm & 13mm socket wrench
- ☐ 10mm & 13mm combination wrench
- ☐ 10mm & 13mm torque wrench
- ☐ 5mm allen wrench
- ☐ Super glue
- ☐ Utility knife
- ☐ Scissors
- ☐ All-purpose cleaner
- ☐ Microfiber rags
- ☐ Furniture pad or other soft surface

ASSEMBLY HARDWARE

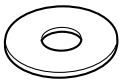

M6 FLAT WASHERS
30 x

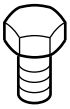

M6 BOLT
30 x

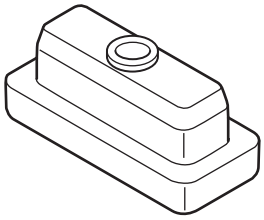

FASTENER BLOCKS
30 x

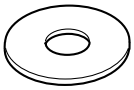

M8 FENDER WASHERS
64 x

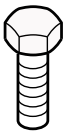

M8 BOLT
4 x

FASTENER BLOCK CLAMPS
30 x

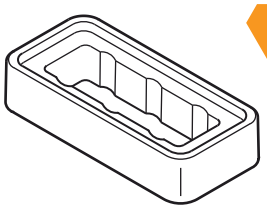

SPRING WASHERS
30 x

M8 NYLOCK NUTS
32 x

RUBBER GASKET
1x

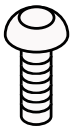

M8 DOME BOLT
28 x

M6 NYLOCK NUTS
16 x

Use only the tools required and the hardware provided in the fitment kit.
Never use acetone or thinners on painted parts.

JOIN THE

ROOF PANELS

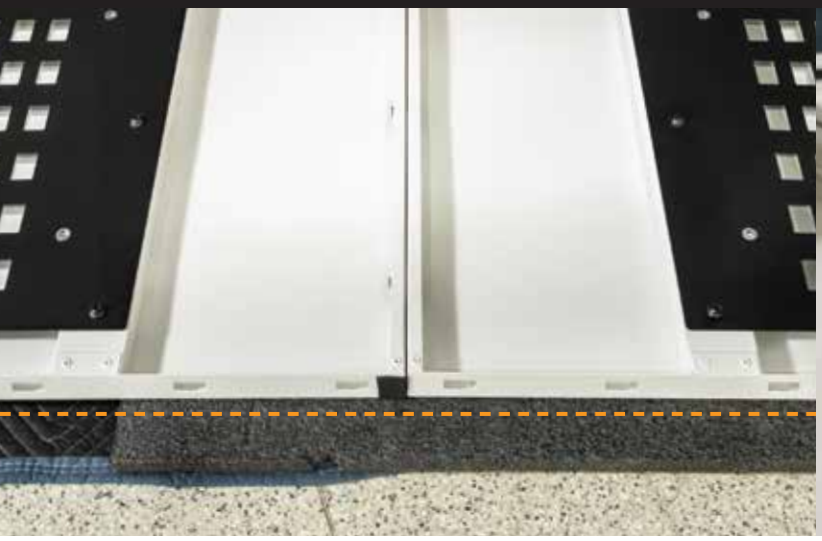

STEP 1 Level both roof panels and align the cutouts.

STEP 2 Install fastener blocks into each of the cutouts along the center.

STEP 3 Torque fastener blocks to 5 Nm or FIRMLY TIGHTEN ensuring the fastener block does not bow.

Edge caps now include improved Roof Panel Channels v
facilitate seamless Gullwing bin installation. In early pro
MOLLE Panels were included, however your
cap will likely not include them as a feature.

Ensure that the roof panels are flush and square

ATTACH THE

FRONT FLANGE

STEP 4 Align the front flange brackets.

STEP 5 HAND TIGHTEN 2x black M8 **dome bolt** stacks into the top two mounting holes on each bracket.

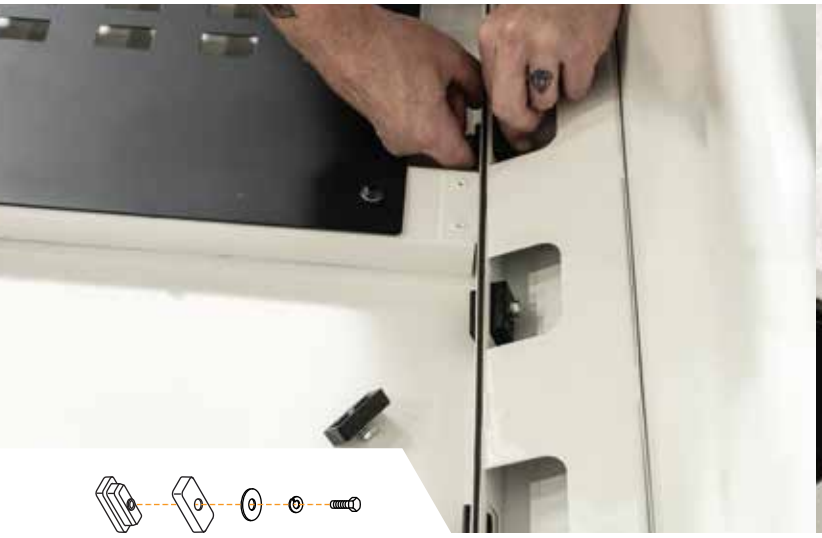

STEP 6 Install fastener blocks into each of the cutouts along the front flange at 5 Nm or FIRMLY TIGHTEN.

STEP 7 HAND TIGHTEN 1x stainless M8 **hex bolt** stack into the bottom mounting hole on each bracket.

ATTACH THE

REAR FLANGE

STEP 8 Align the rear flange brackets.

STEP 9 HAND TIGHTEN 2x black M8 **dome bolt** stacks into the top two mounting holes on each bracket.

STEP 10 Install fastener blocks into each of the cutouts along the rear flange at 5 Nm or FIRMLY TIGHTEN.

STEP 11 HAND TIGHTEN 1x stainless M8 **hex bolt** stack into the bottom mounting hole on each bracket.

ATTACH THE

SIDE STIFFENERS

STEP 12 Place side stiffener left and right on top, from front flange corner to rear flange corner.

STEP 13 HAND TIGHTEN 4x black M8 **dome bolt** stacks into the mounting holes on each end of the side stiffeners.

STEP 14 HAND TIGHTEN 1x black M8 **dome bolt** stack into the side bracket mounting hole on each end.

FIRMLY TIGHTEN all M8 hardware on

STEP 5
STEP 7
STEP 9
STEP 11
STEP 13
STEP 14

Ensure the stiffeners are seated flat.

APPLY THE FRONT FLANGE

GASKET

STEP 16 Peel and stick one end of the loose gasket following the edge of the front flange.

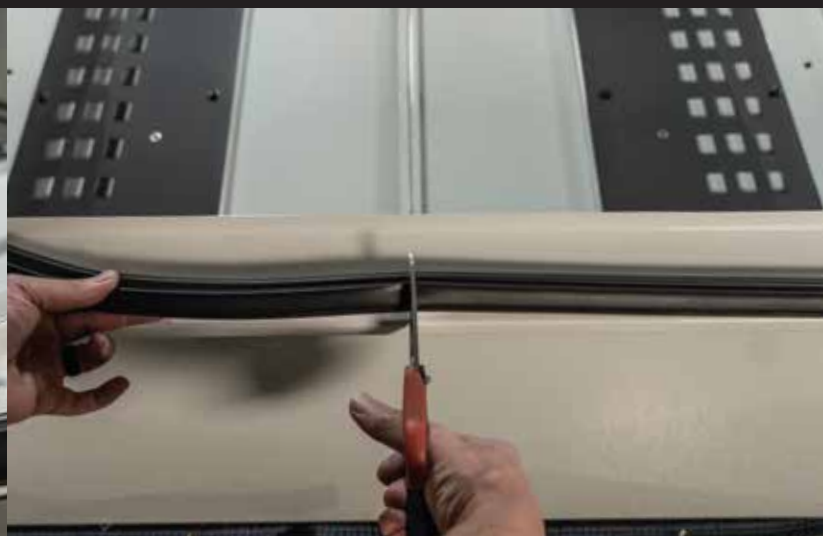

STEP 17 Cut at the center of the front flange.

STEP 18 Peel and stick the other end of the loose gasket and cut to fit (do not stick the end yet).

STEP 19 Super glue the gasket end and butt-join together.

Ensure a continuous seal with no gaps or twists.

APPLY THE

SEAL TAPE

STEP 20 Peel and stick the seal tape across the front panel.

Ensure a continuous seal with no gaps or twists.

FLIP & FIT

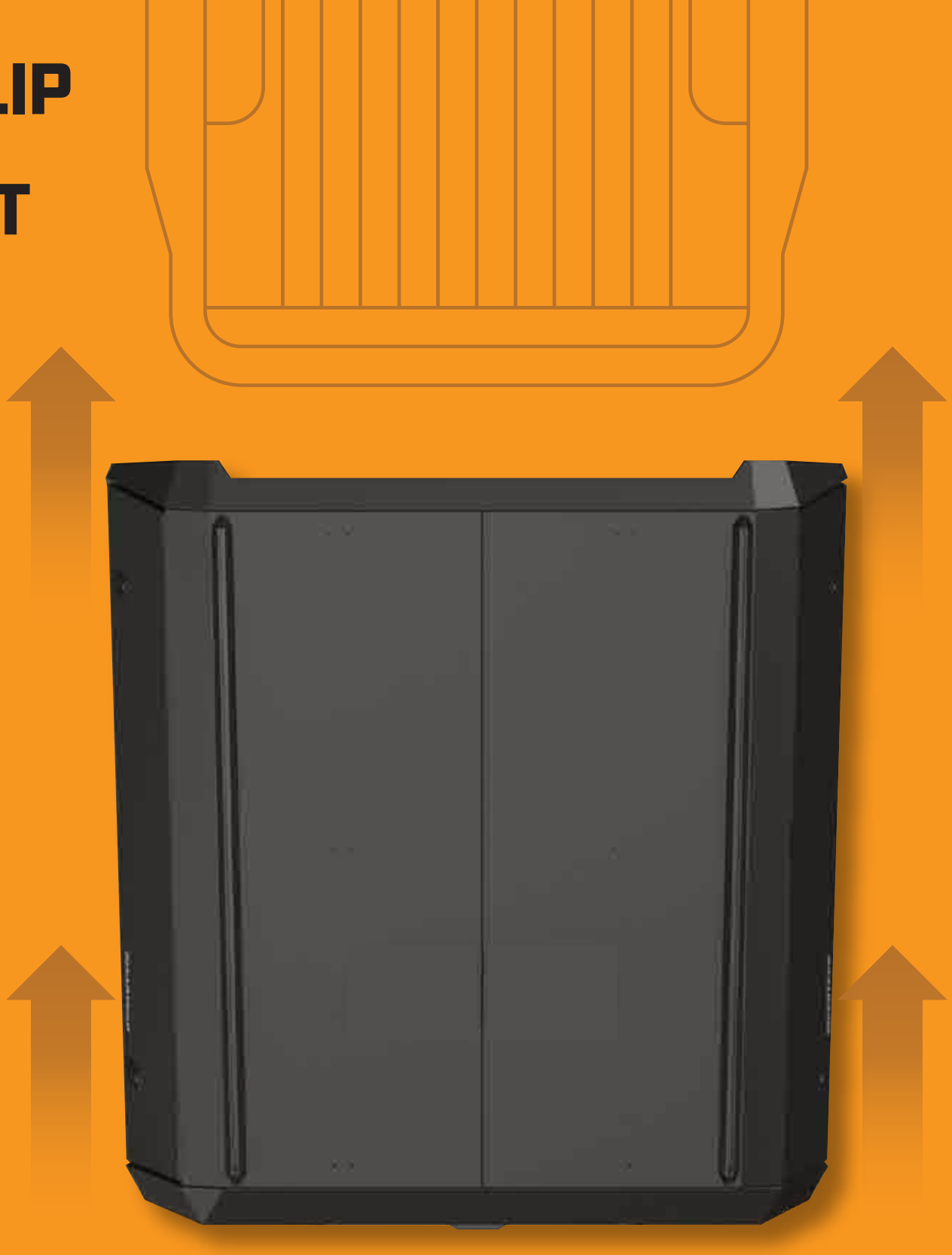

Refrain from dragging the gasket on the bed rail.

POSITION THE

CAP ON THE TRUCK

STEP 21 Gently flip the cap over, and position it on the truck without dragging the rubber gasket over the bedrail.

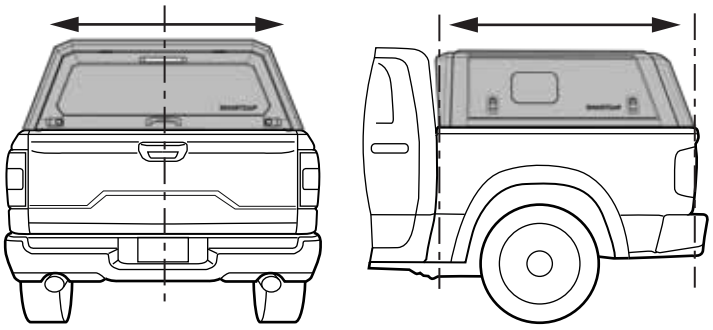

We recommend at least four buddies lift the cap.

APPLY THE SIDE DOOR

GASKET

STEP 22 Apply butyl to joints at all 4 corners on each door.

STEP 23 Starting from the bottom, press the gasket into place around the door aperture edge.

STEP 24 Gently tap the gasket into each corner with a rubber mallet to secure it in place.

STEP 25 Cut the gasket to fit and join the ends together.

Tuck the butyl into the gasket so it does not show.

ATTACH THE

SIDE DOORS

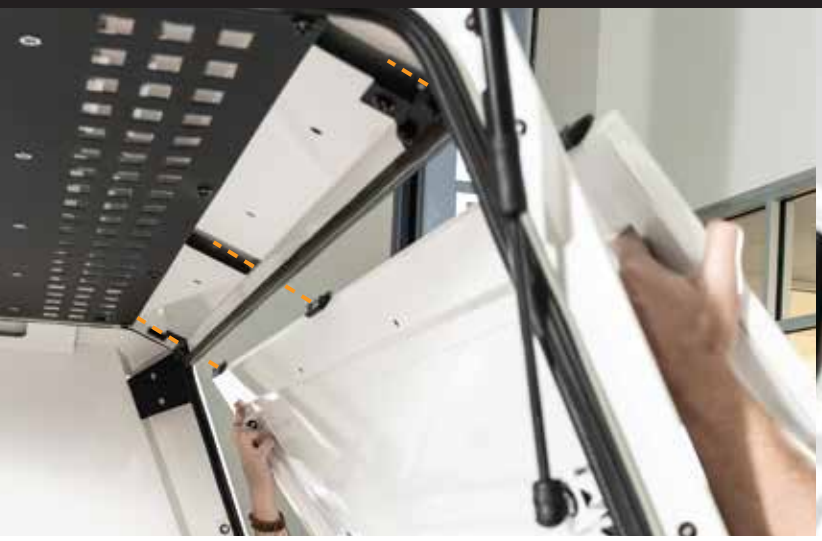

STEP 26 Locate the three pairs of mounting holes on the roof panel.

STEP 27 Insert the side door hinge bolts into the mounting holes and hold in place.

STEP 28 Reach in and install black M6 nuts onto each of the six door hinge studs.

MOUNT THE

LOCKS

STEP 29 Remove the screw and cage from the back of the locks.

STEP 30 Thread the locks through the door holes facing outward.

STEP 31 Reinstall the cages and tighten the screws.

Ensure rear locks to rear door and side locks to side doors.

MOUNT THE

GAS STRUTS

STEP 32 Ensure that the ball connectors are positioned 180 degrees from one another.

STEP 33 Install the gas struts by pushing the connectors on to the ball studs.

Test the doors open and close smoothly and locks function properly.

INSTALL THE

C-CLAMPS

STEP 34 Place supplied thin rubber pads on the three side stiffener cutouts.

STEP 35 Place the upper c-clamp arm on the thin rubber pads.

STEP 36 Install the c-clamp by FIRMLY TIGHTENING the bolt through the lower c-clamp.

CONNECT THE SUPER DUTY

THIRD BRAKE LIGHT

Be sure the vehicle is turned off for this installation.
Read through the entire procedure before starting and follow the steps carefully to ensure the third brake light will function properly.
Use a test light to check for successful installation.

STEP 37

LOCATE THE HIGH MOUNT STOP LAMP WIRE SITUATED WITHIN THE REAR BUMPER ASSEMBLY.

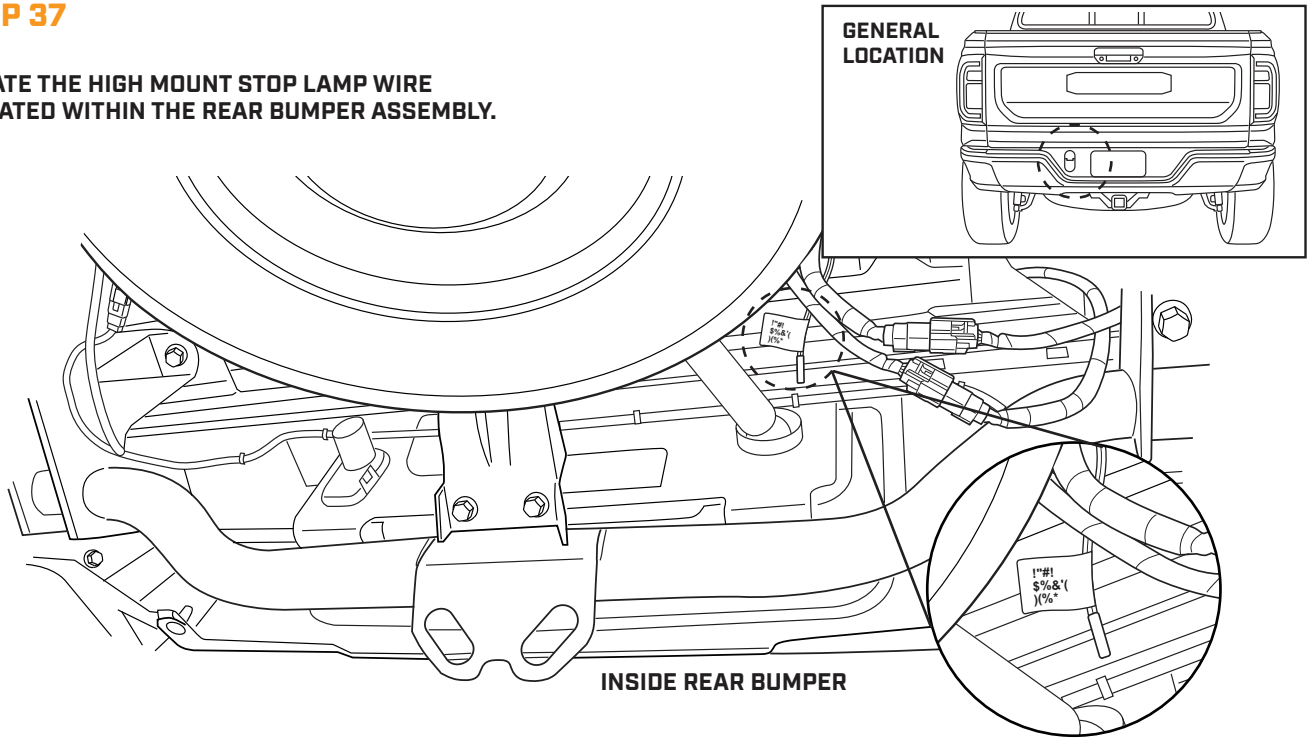

STEP 38

USE WIRE STRIPPERS TO TRIM OFF THE END OF THE LAMP WIRE.

1

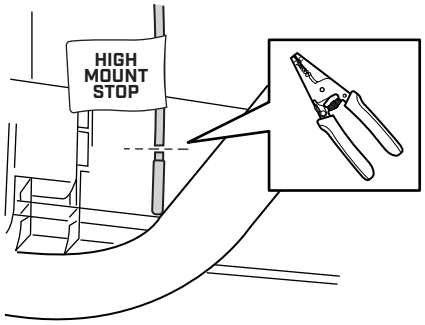

USE WIRE STRIPPERS TO REMOVE A HALF INCH OF PLASTIC WIRE INSULATION, EXPOSING THE COPPER WIRING WITHIN.

2

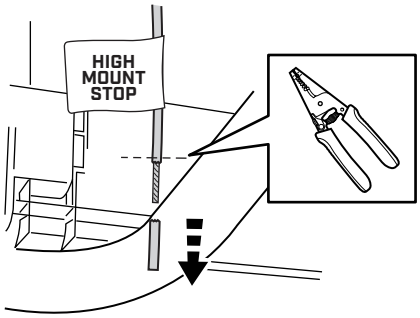

SLIDE THE STRIPPED END OF THE LAMP WIRE INTO ONE SIDE OF THE SPLICE TERMINAL.

3

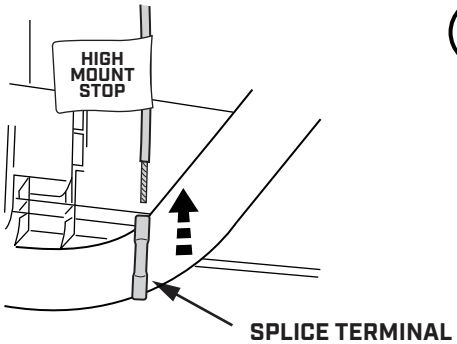

USE WIRE STRIPPERS TO APPLY FIRM PRESSURE TO THE SPLICE TERMINAL AT THE POINT WHERE THE WIRE ENTERS.

4

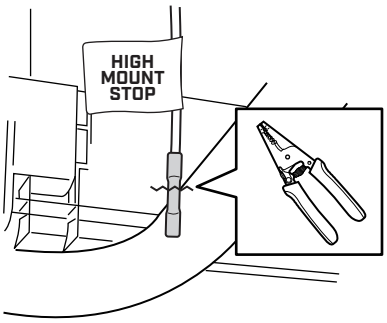

STEP 39

LOCATE THE SUPPLIED CONNECTOR HARNESS.

USE THE WIRE STRIPPERS TO REMOVE A HALF INCH OF PLASTIC INSULATION FROM THE END OF THE BLUE WIRE.

1

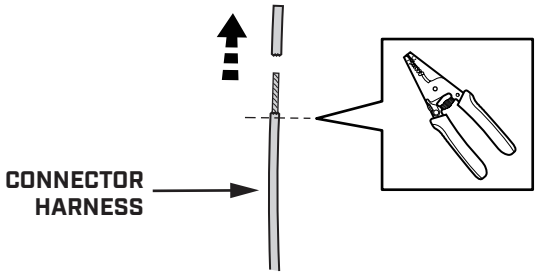

SLIDE THE STRIPPED END OF THE CONNECTOR HARNESS WIRE INTO THE OTHER SIDE OF THE SPLICE TERMINAL.

2

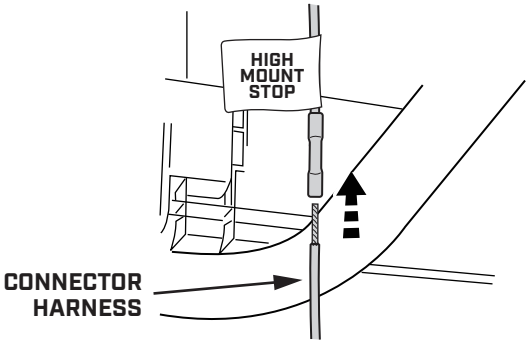

USE WIRE STRIPPERS TO APPLY FIRM PRESSURE TO THE SPLICE TERMINAL AT THE POINT WHERE THE WIRE ENTERS.

3

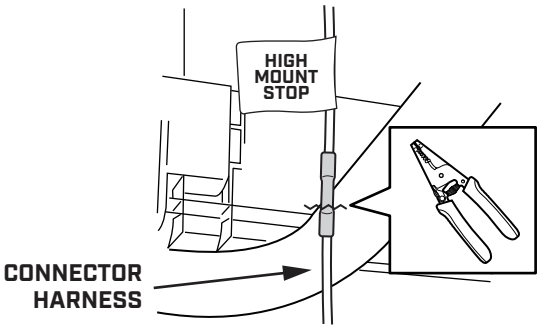

APPLY HEAT TO THE SPLICE TERMINAL TO SHRINK AND CONFORM TIGHTLY AROUND THE WIRES.

4

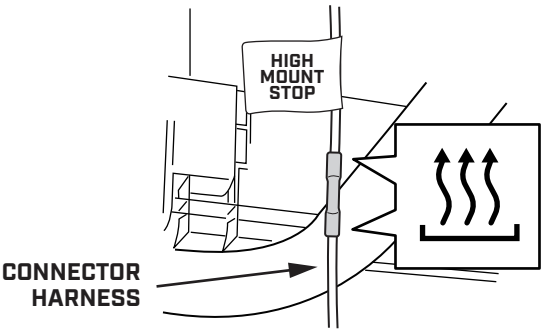

STEP 40

SECURE THE GROUND WIRE ON THE CONNECTOR HARNESS TO THE CHASSIS AT A SUITABLE LOCATION UNDER THE VEHICLE.

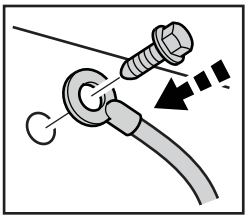

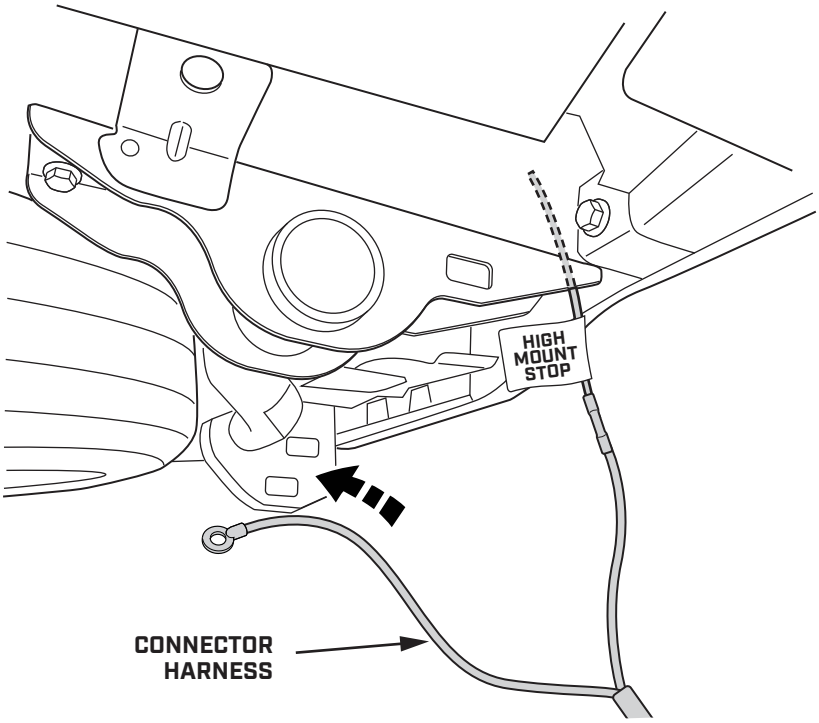

STEP 41

APPLY THE PLASTIC PROTECTIVE SHEATH ALONG THE ENTIRE LENGTH OF THE CONNECTOR HARNESS.

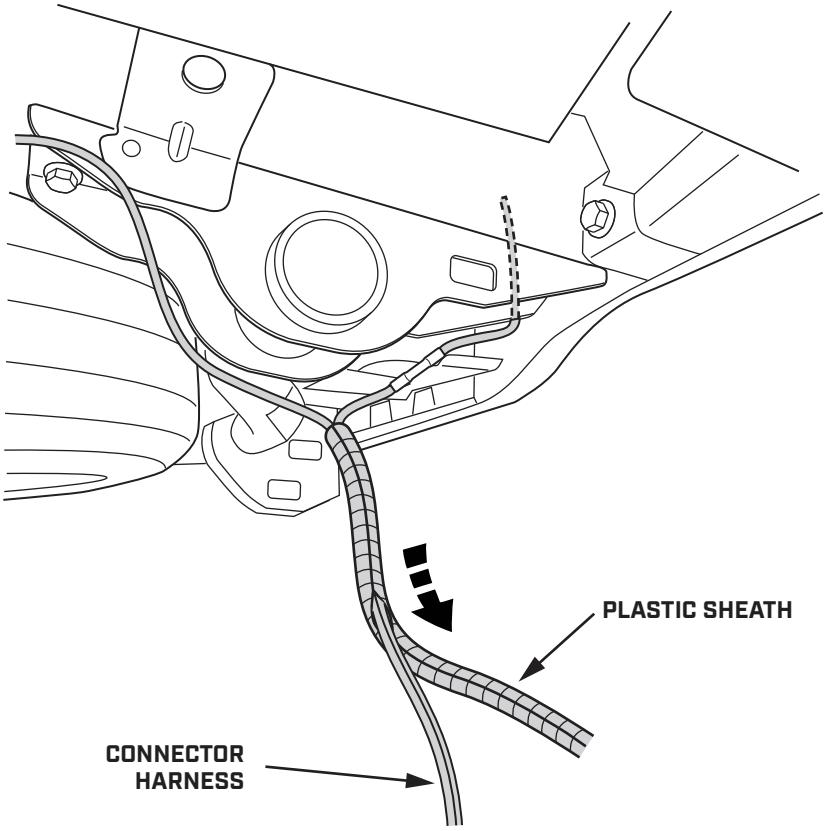

STEP 42

REMOVE THE BOLTS HOLDING THE DRIVER SIDE TAILLIGHT ASSEMBLY.

PLACE THE TAILLIGHT CAREFULLY ON THE TAILGATE. DO NOT UNPLUG ANY CONNECTORS.

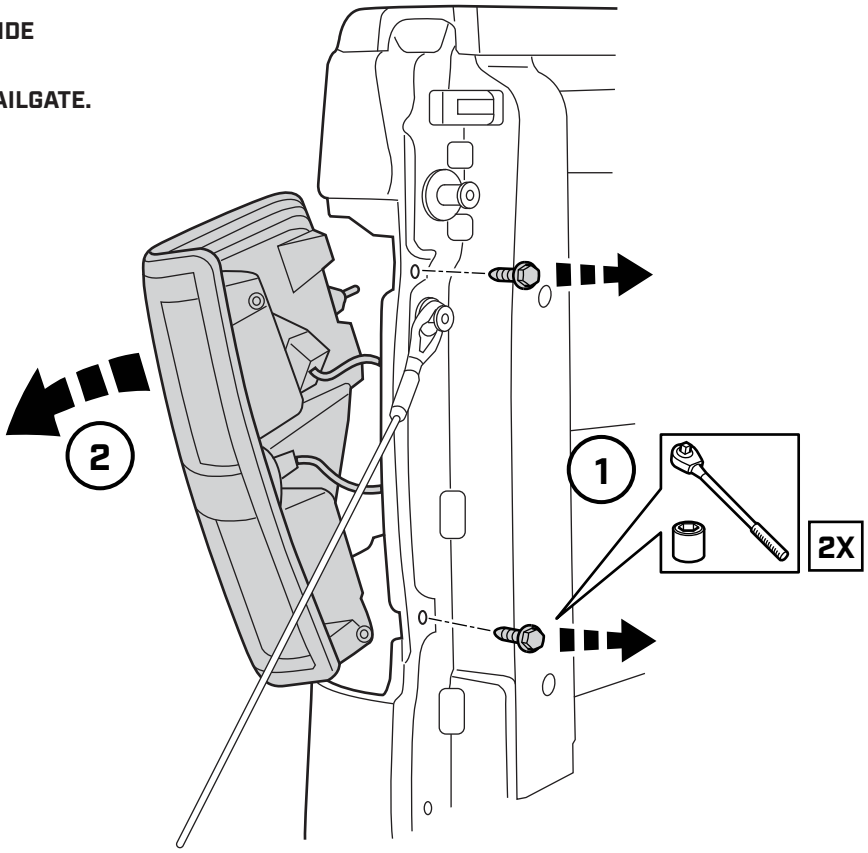

STEP 43

CAREFULLY PULL THE CONNECTOR HARNESS OUT THROUGH THE TAILLIGHT CAVITY.

ROUTE THE CONNECTOR HARNESS UP AND OUT THROUGH THE HOLE IN THE SIDE OF THE BED.

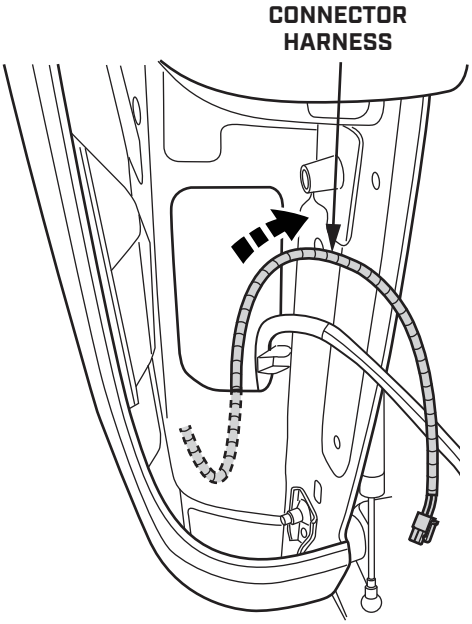

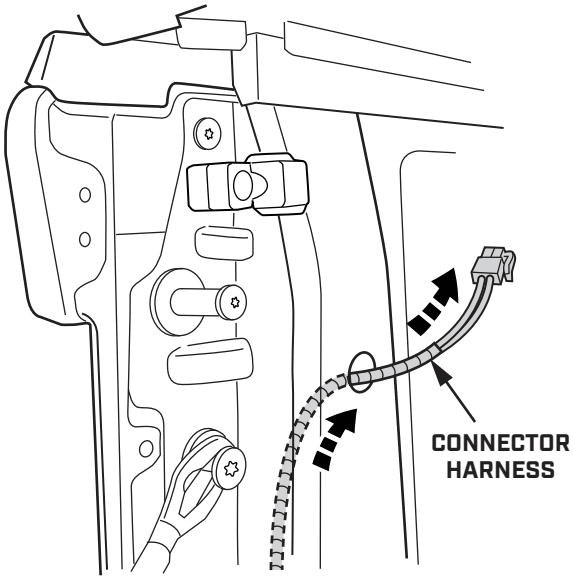

STEP 44

LOCATE AND DISCONNECT THE THIRD BRAKE LIGHT EXTENSION HARNESS FROM THE INSIDE BACK LEFT CORNER OF THE SMARTCAP.

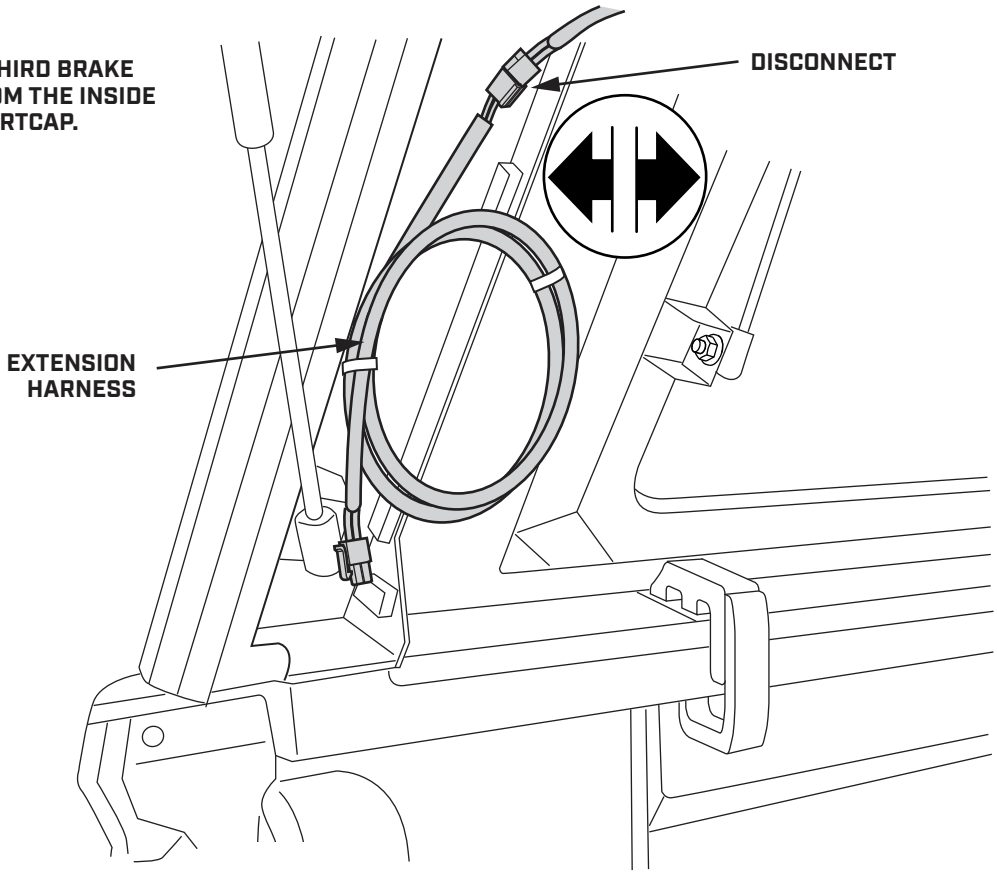

STEP 45

CONNECT THE 2-PIN PLUG FROM THE CONNECTOR HARNESS TO THE THIRD BRAKE LIGHT HARNESS.

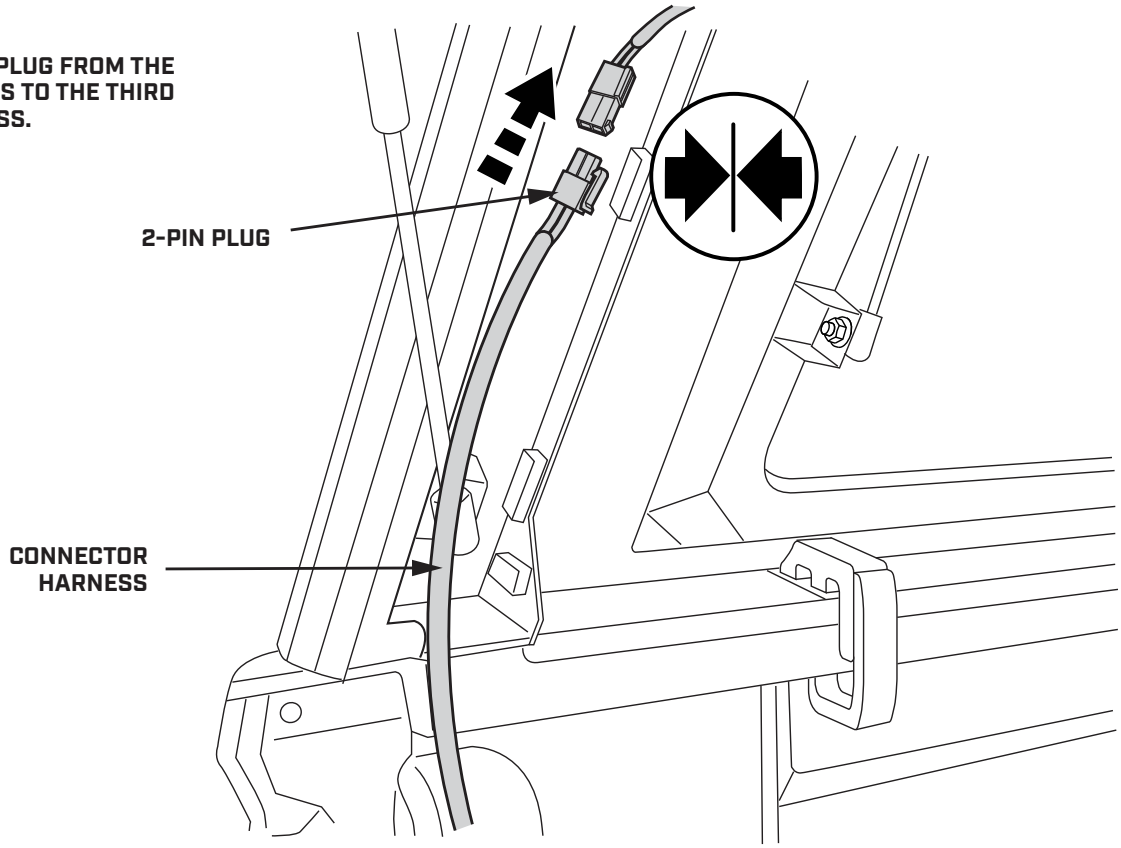

STEP 46

REINSTALL THE TAILLIGHT ASSEMBLY.

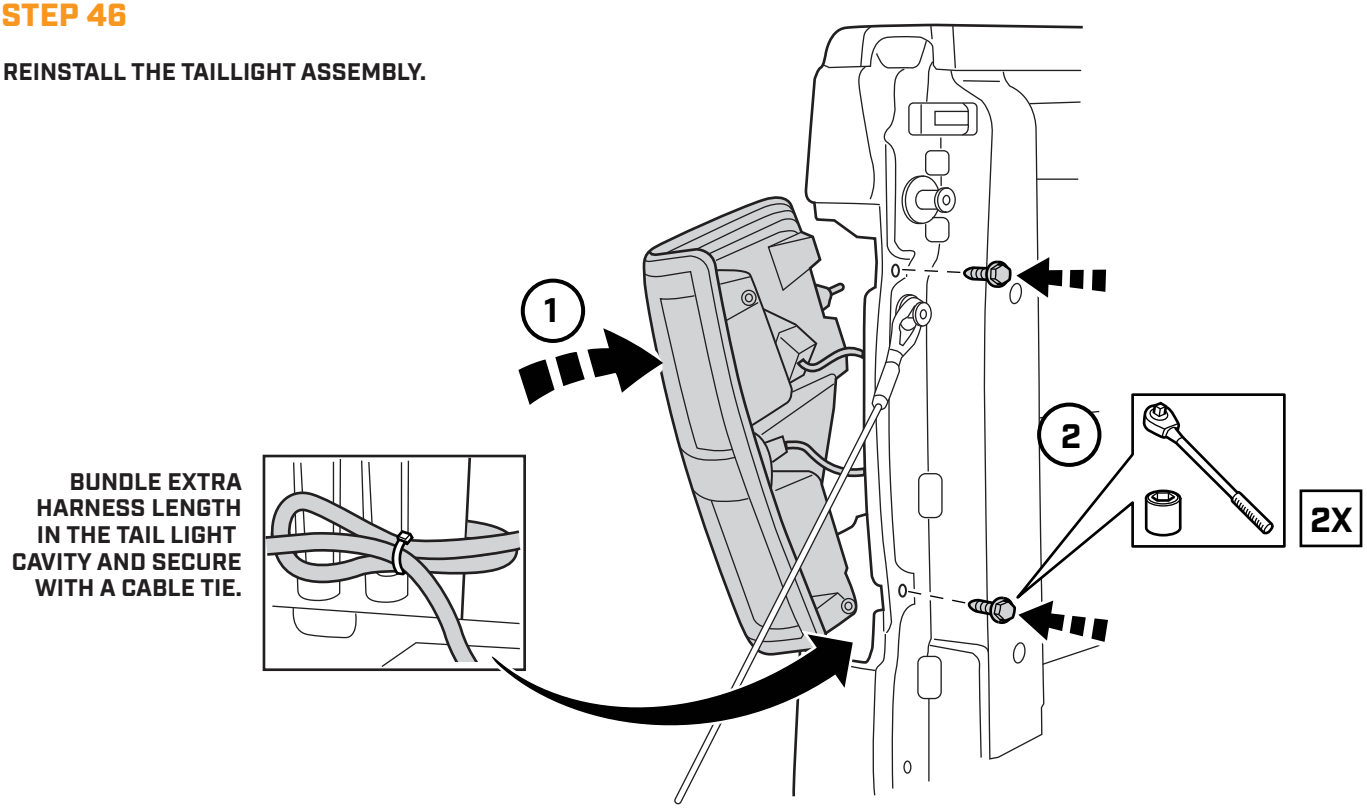

STEP 47

SECURE LOOSE HANGING CONNECTOR HARNESS WIRES ALONG THE CHASSIS OF THE VEHICLE WITH CABLE TIES.

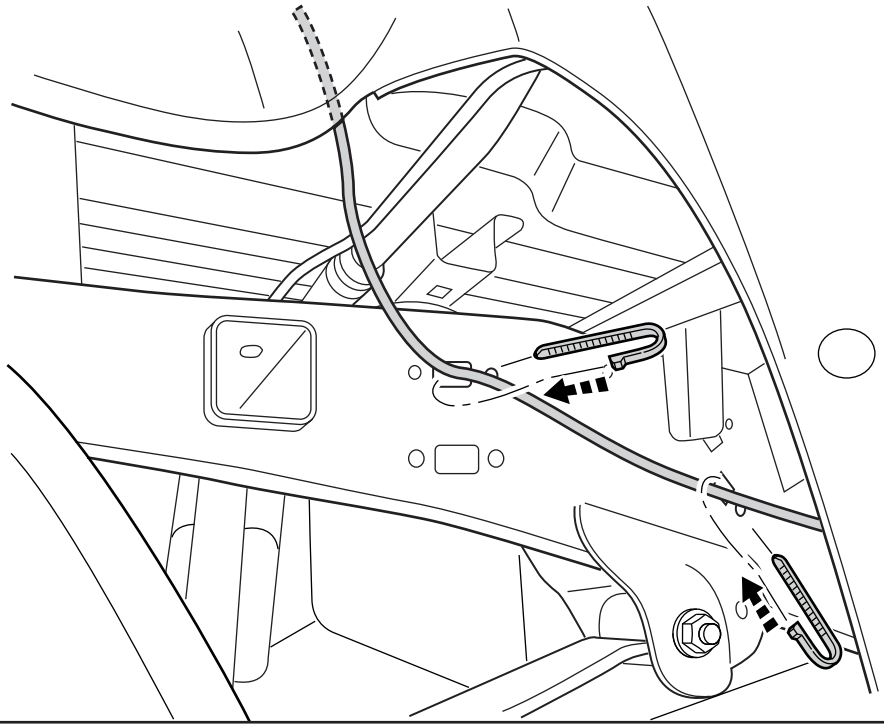

TEST YOUR BRAKE LIGHTS & TURN SIGNALS

SMARTCAP

THANKS FOR YOUR PURCHASE. PLEASE LET US KNOW IF YOU HAVE ANY QUESTIONS.

SMARTCAP.COM

SUPPORT.NA@SMARTCAP.COM - NORTH AMERICA

SUPPORT.SA@SMARTCAP.COM - REST OF WORLD