SMARTCAP

CHEVROLET SILVERADO 5.9' – 6.6'
EDGE DEFENDER

Assembly Guide

Contact us at **SUPPORT.NA@SMARTCAP.COM**

SMARTCAP.COM

COMPONENTS

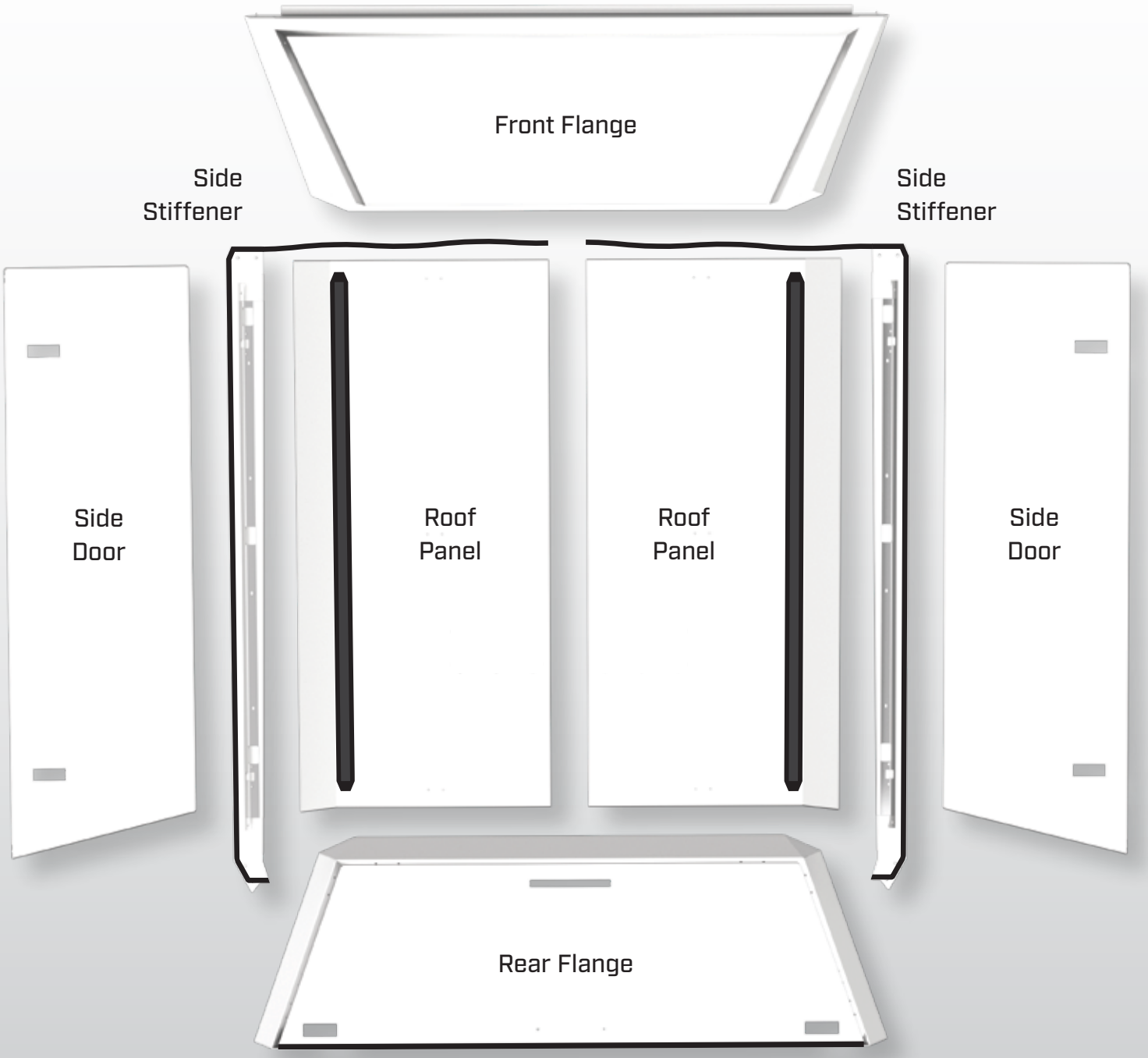

Inspect each of the components, if any manufacturing imperfections or shipping damages are found, stop the assembly and contact us at **support.na@smartcap.com**

Edge caps now include improved Roof Panel Channels with Rivnuts to facilitate seamless Gullwing bin installation. In early production runs Roof MOLLE Panels were included, however your cap will likely **not include** them as a feature.

TOOLS REQUIRED

- ☐ 10mm & 13mm socket wrench
- ☐ 10mm & 13mm combination wrench
- ☐ 10mm & 13mm torque wrench
- ☐ 5mm allen wrench
- ☐ Super glue
- ☐ Utility knife
- ☐ Scissors
- ☐ All-purpose cleaner
- ☐ Microfiber rags
- ☐ Furniture pad or other soft surface

ASSEMBLY HARDWARE

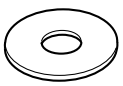

M6 FLAT WASHERS
30 x

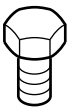

M6 BOLT
30 x

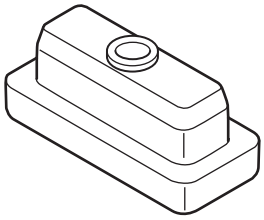

FASTENER BLOCKS
30 x

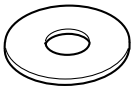

M8 FENDER WASHERS
48 x

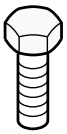

M8 BOLT
4 x

FASTENER BLOCK CLAMPS
30 x

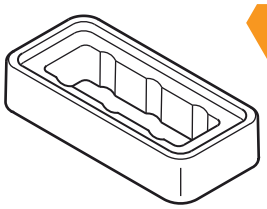

SPRING WASHERS
30 x

M8 NYLOCK NUTS
24 x

RUBBER GASKET
1x

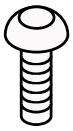

M8 DOME BOLT
20 x

M6 NYLOCK NUTS
12 x

Use only the tools required and the hardware provided in the fitment kit.
Never use acetone or thinners on painted parts.

JOIN THE

ROOF PANELS

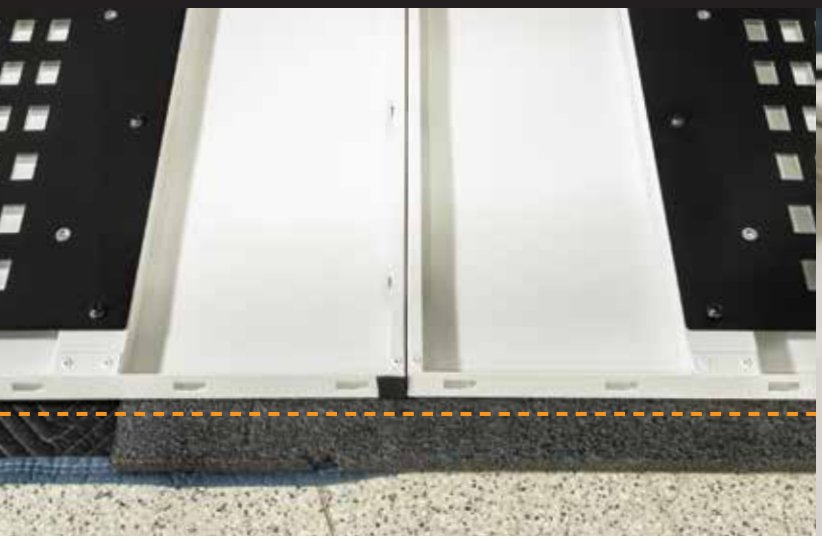

STEP 1 Level both roof panels and align the cutouts

STEP 2 Install fastener blocks into each of the cutouts along the center

STEP 3 Torque fastener blocks to 5 Nm or FIRMLY TIGHTEN ensuring the fastener block does not bow

Ensure that the roof panels are flush and square

ATTACH THE

FRONT FLANGE

STEP 4 Align the front flange brackets

STEP 5 HAND TIGHTEN 2x black M8 **dome bolt** stacks into the top two mounting holes on each bracket

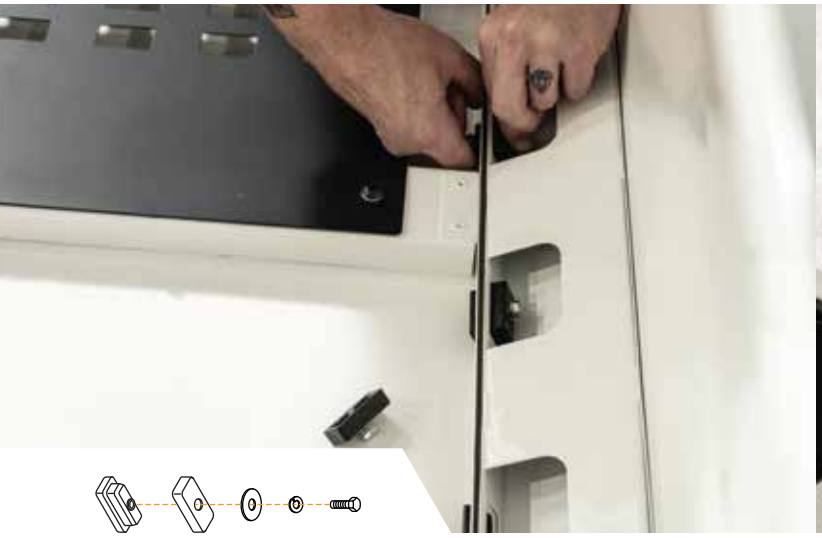

STEP 6 Install fastener blocks into each of the cutouts along the front flange at 5 Nm or FIRMLY TIGHTEN

STEP 7 HAND TIGHTEN 1x stainless M8 **hex bolt** stack into the bottom mounting hole on each bracket

ATTACH THE

REAR FLANGE

STEP 8 Align the rear flange brackets

STEP 9 HAND TIGHTEN 2x black M8 **dome bolt** stacks into the top two mounting holes on each bracket

STEP 10 Install fastener blocks into each of the cutouts along the rear flange at 5 Nm or FIRMLY TIGHTEN

STEP 11 HAND TIGHTEN 1x stainless M8 **hex bolt** stack into the bottom mounting hole on each bracket

ATTACH THE

SIDE STIFFENERS

STEP 12 Place side stiffener left and right on top, from front flange corner to rear flange corner

STEP 13 HAND TIGHTEN 2x black M8 **dome bolt** stacks into the two mounting holes on each end

STEP 14 HAND TIGHTEN 1x black M8 **dome bolt** stack into the side bracket mounting hole on each end

FIRMLY TIGHTEN all M8 hardware on

STEP 5
STEP 7
STEP 9
STEP 11
STEP 13
STEP 14

Ensure the stiffeners are seated flat

APPLY THE FRONT FLANGE

GASKET

STEP 16 Peel and stick one end of the loose gasket following the edge of the front flange

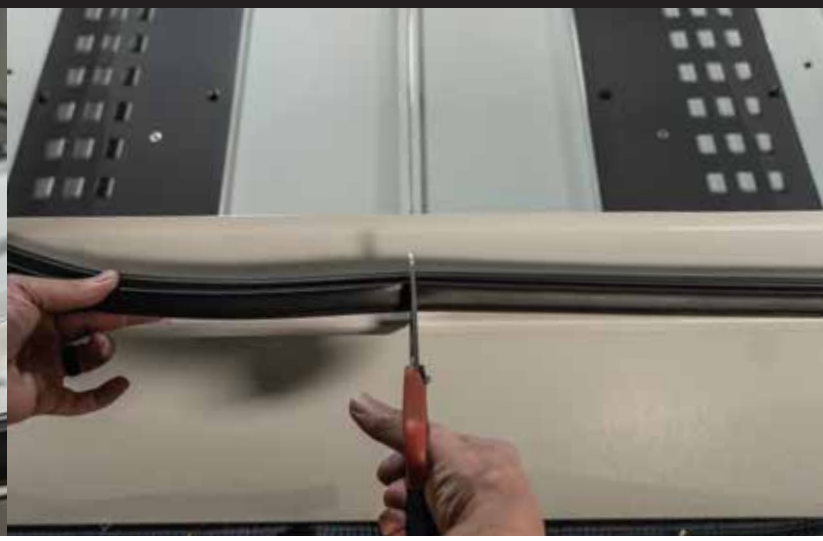

STEP 17 Cut at the center of the front flange

STEP 18 Peel and stick the other end of the loose gasket and cut to fit (do not stick the end yet)

STEP 19 Super glue the gasket end and butt-join together

Ensure a continuous seal with no gaps or twists

APPLY THE

SEAL TAPE

STEP 20 Peel and stick the seal tape across the front panel

Ensure a continuous seal with no gaps or twists

FLIP & FIT

Refrain from dragging the gasket on the bed rail.

POSITION THE

CAP ON THE TRUCK

STEP 21 Gently flip the cap over, and position it on the truck without dragging the rubber gasket over the bedrail

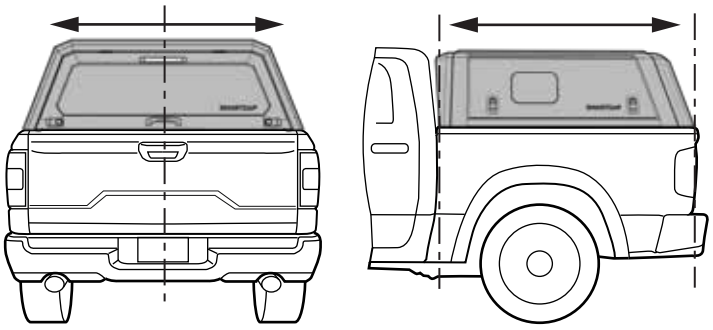

We recommend at least four buddies lift the cap

APPLY THE SIDE DOOR

GASKET

STEP 22 Apply butyl to joints at all 4 corners on each door

STEP 23 Starting from the bottom, press the gasket into place around the door aperture edge

STEP 24 Gently tap the gasket into each corner with a rubber mallet to secure it in place.

STEP 25 Cut the gasket to fit and join the ends together.

Tuck the butyl into the gasket so it does not show

ATTACH THE

SIDE DOORS

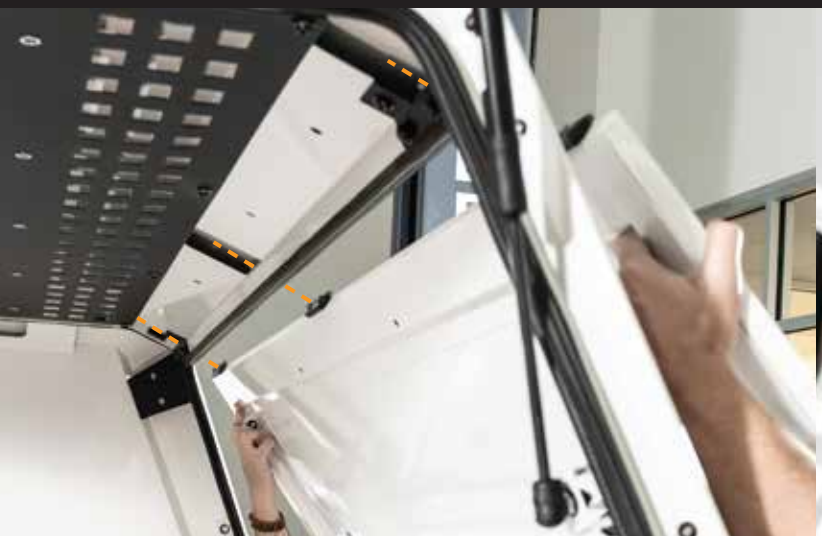

STEP 26 Locate the three pairs of mounting holes on the roof panel

STEP 27 Insert the side door hinge bolts into the mounting holes and hold in place

STEP 28 Reach in and install black M6 nuts onto each of the six door hinge studs

MOUNT THE

LOCKS

STEP 29 Remove the screw and cage from the back of the locks

STEP 30 Thread the locks through the door holes facing outward

STEP 31 Reinstall the cages and tighten the screws

Ensure rear locks to rear door and side locks to side doors

MOUNT THE

GAS STRUTS

STEP 32 Ensure that the ball connectors are positioned 180 degrees from one another

STEP 33 Install the gas struts by pushing the connectors on to the ball studs

Test the doors open and close smoothly and locks function properly

INSTALL THE

C-CLAMPS

STEP 34 Place supplied thin rubber pads on the three side stiffener cutouts

STEP 35 Place the upper c-clamp arm on the thin rubber pads

STEP 36 Install the c-clamp by FIRMLY TIGHTENING the bolt through the lower c-clamp

Place the two smaller c-clamps closest to the tailgate

CONNECT THE SILVERADO 19+

THIRD BRAKE LIGHT

Be sure the vehicle is turned off for this installation.
Read through the entire procedure before starting and follow the steps carefully to ensure the third brake light will function properly.
Use a test light to check for successful installation.

STEP 37

Begin at the driver's side. Look under the dashboard at the foot well and locate the grey connector

Pull the male dummy connector out from the female connector

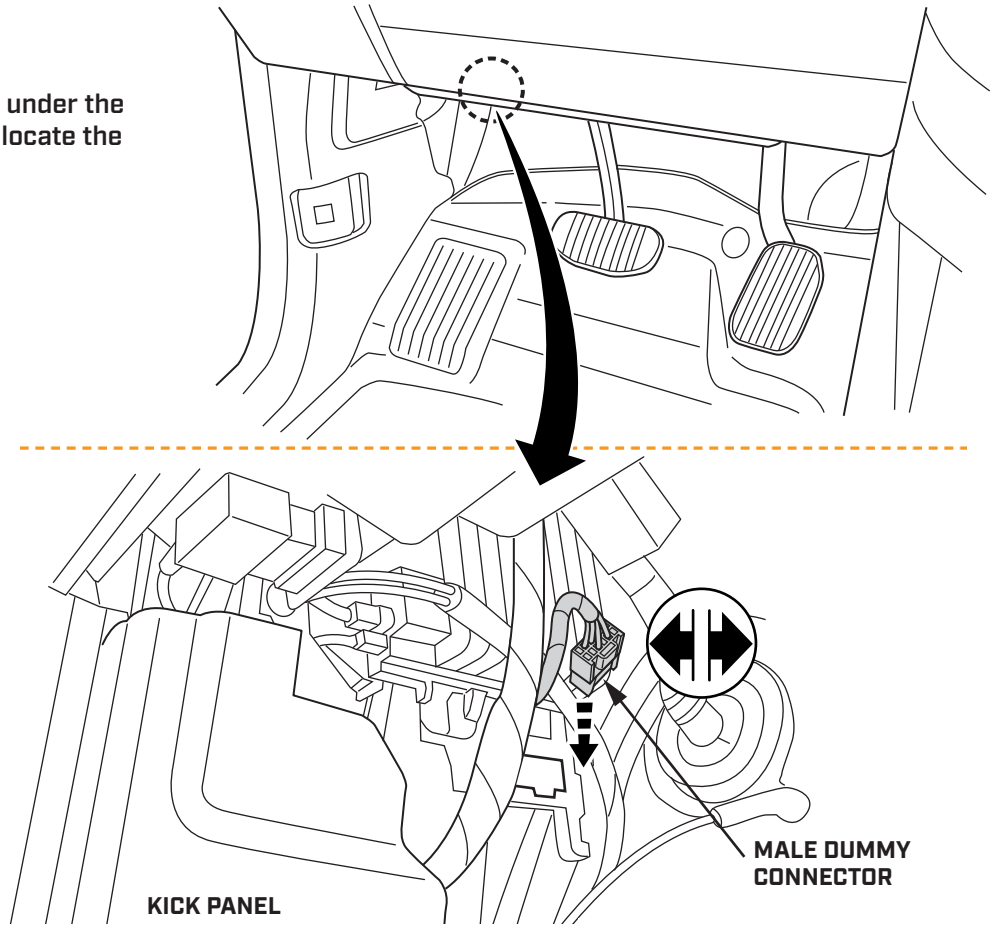

STEP 38

Plug the male connector from the t-harness into the vehicle connector

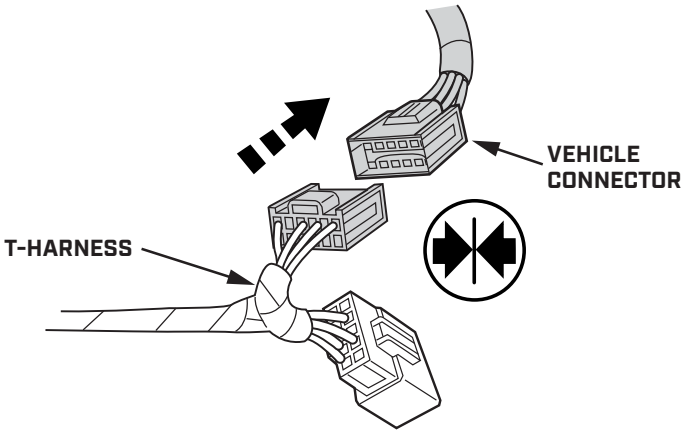

STEP 39

Plug the male dummy connector from the vehicle connector into the t-harness

Secure with a cable tie as shown

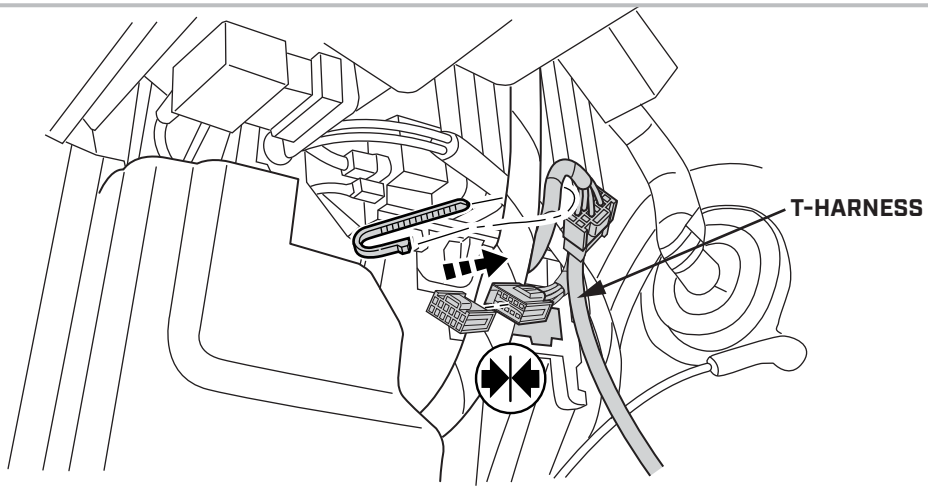

STEP 40

Using a plastic pry tool, carefully pry off the door sill trim plate on the driver side

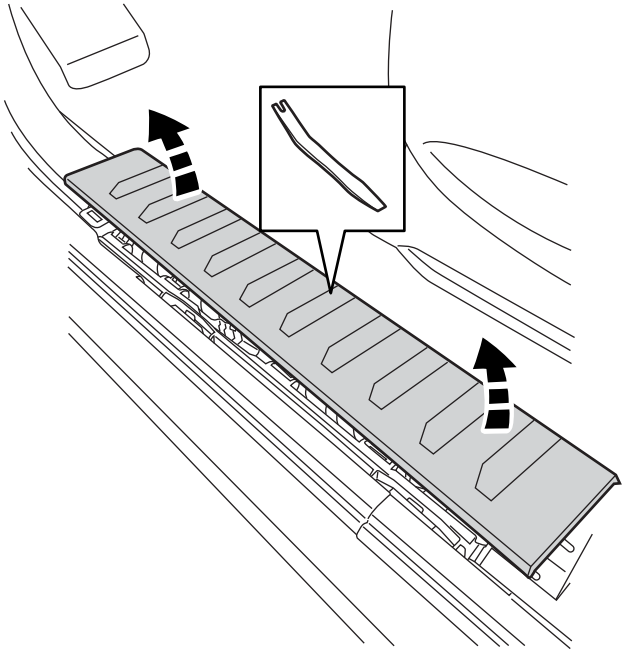

STEP 41

Under the driver side dash, locate the 3-pin plug of the t-harness and plug the connector harness into it

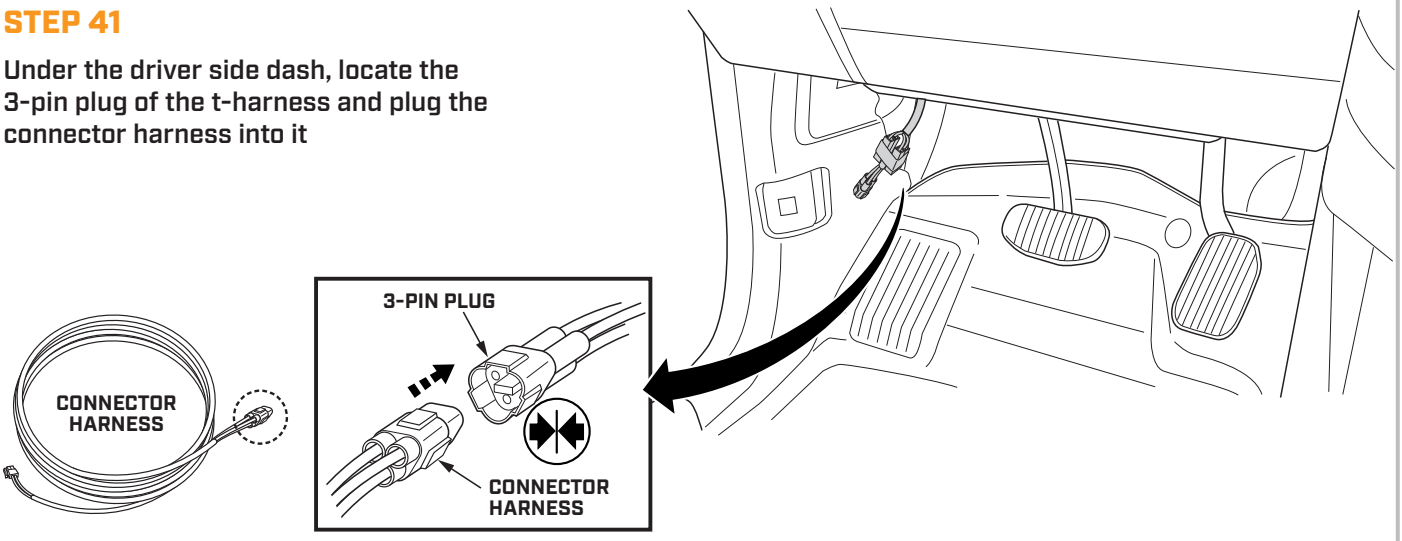

STEP 42

Tuck the harnesses under the edge of the outer foot well kick panel and route down towards the door sill

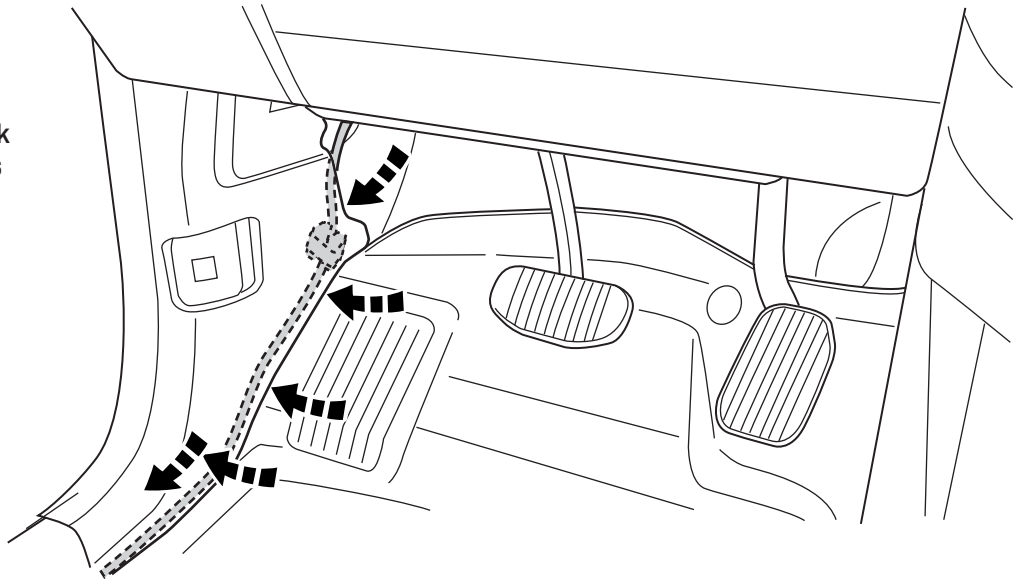

STEP 43

Underneath the carpet liner, there will be a rubber grommet in the metal floor

Locate the grommet from underneath the vehicle

If needed, drill or cut a small opening through the rubber grommet

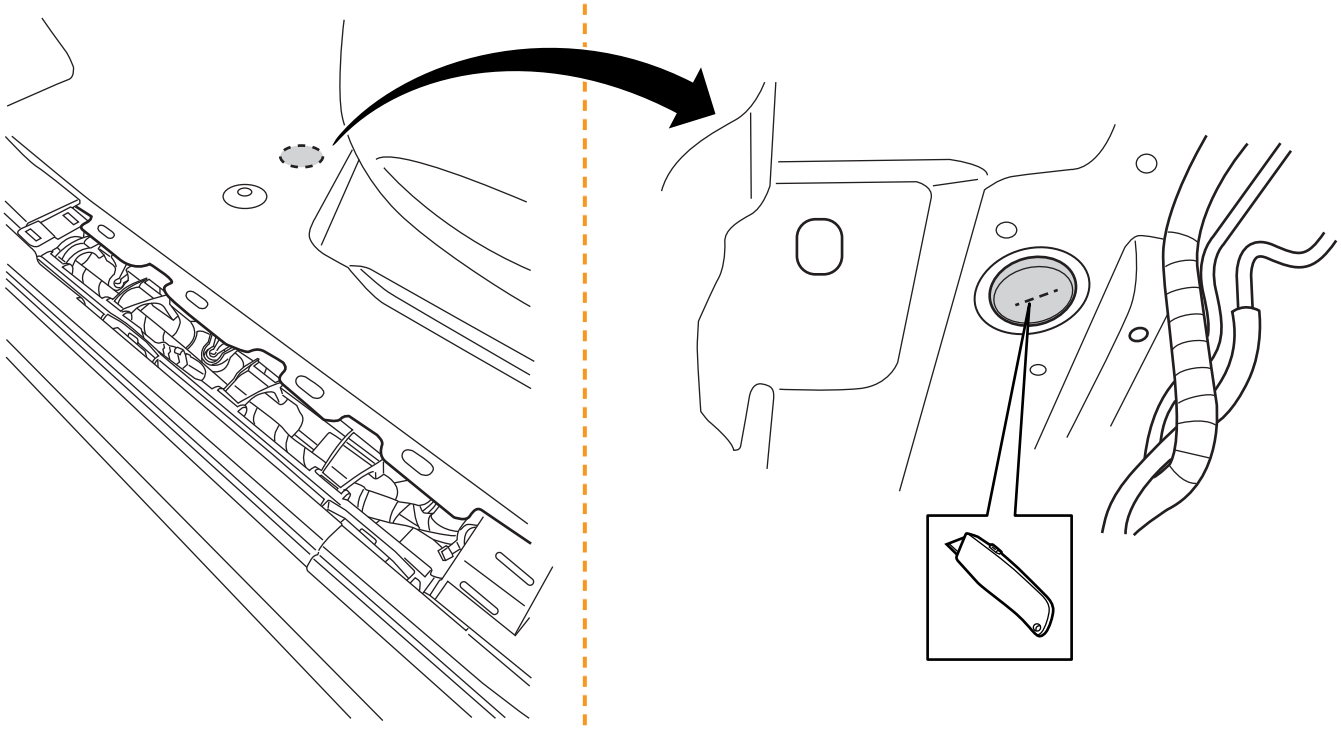

STEP 44

Route the 2-pin plug at the end of connector harness underneath the carpet liner and through the opening in the grommet

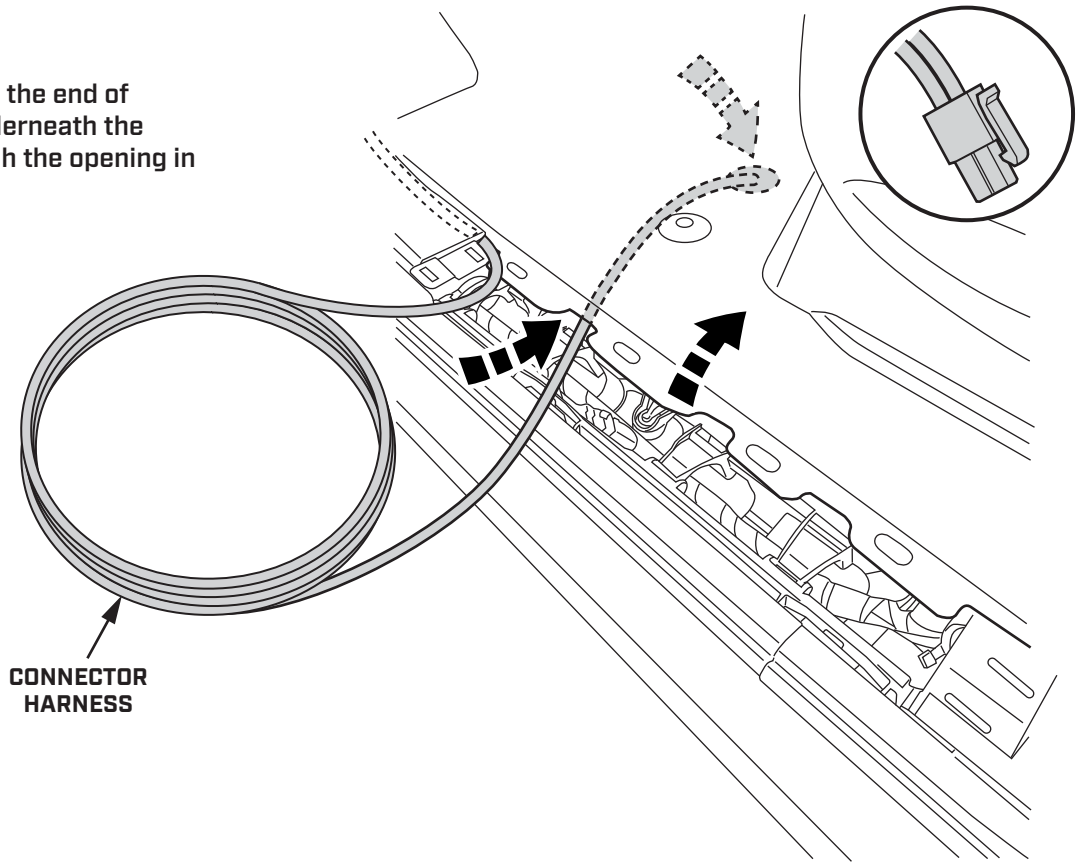

STEP 45

Carefully pull the entire length of the connector harness down through the grommet

It is recommended that a sealing compound be applied to the opening for weather and dirt protection

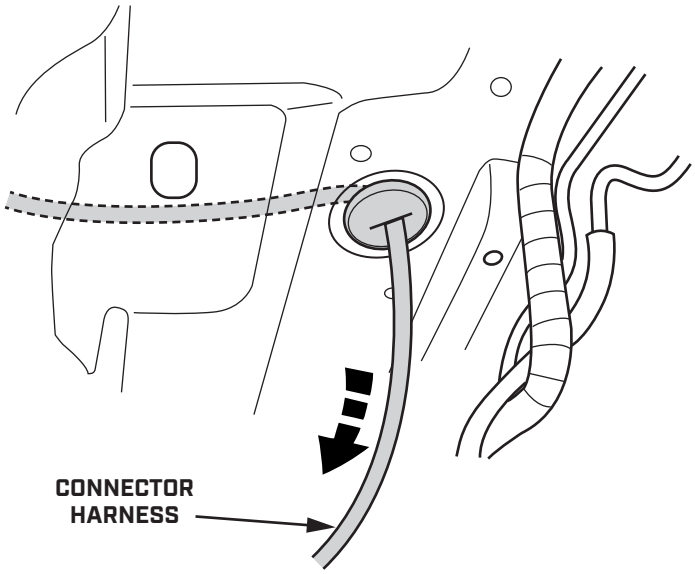

STEP 46

From underneath the vehicle, begin routing the connector harness over the top of the driver side frame rail

Secure the harness along the outside of the frame with cable ties as shown

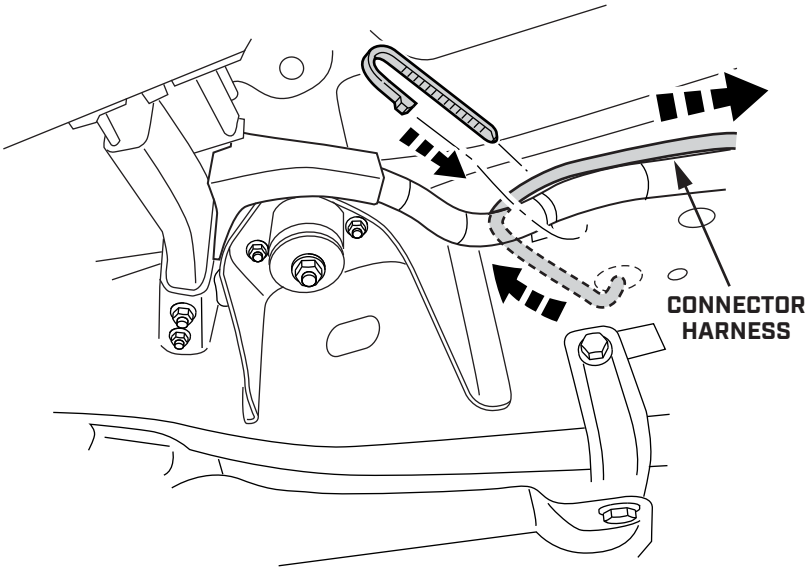

STEP 47

Continue routing the connector harness towards the rear of the vehicle, securing to the vehicle with cable ties when necessary

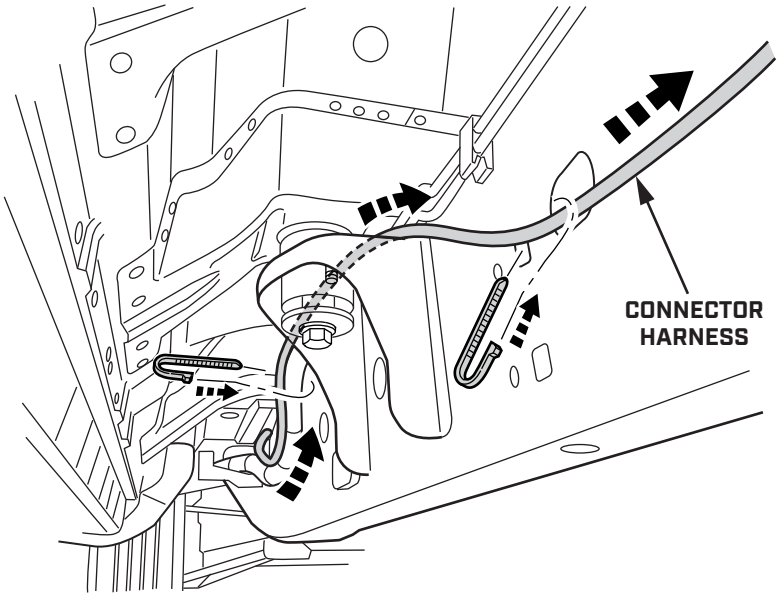

STEP 48

Route the connector harness up and over the rear wheel well

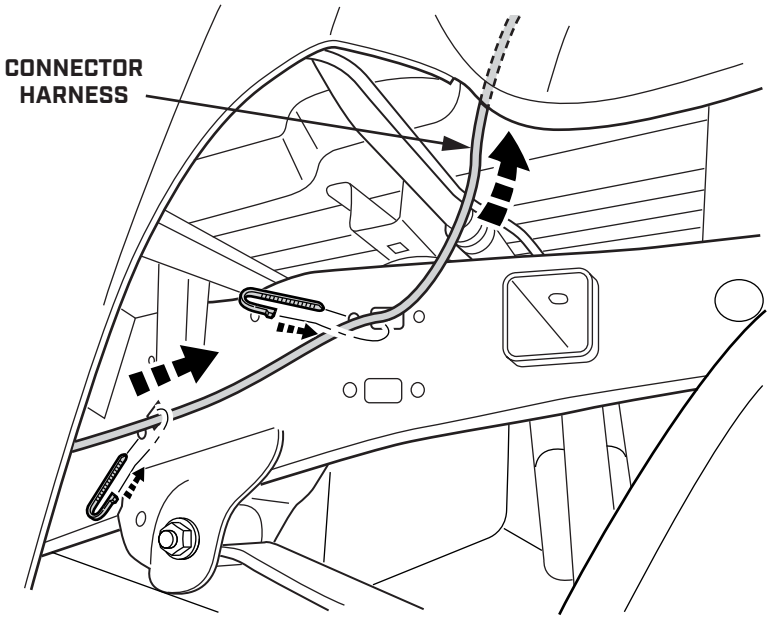

STEP 49

Route the connector harness down over the back of the rear wheel well and secure with cable tie as shown

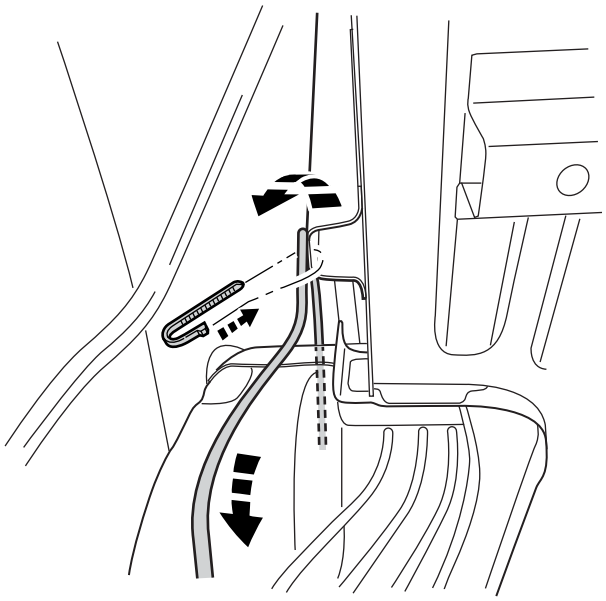

STEP 50

Remove the bolts holding the driver side tailight assembly

Place the tailight carefully on the tailgate. Do not unplug any connectors

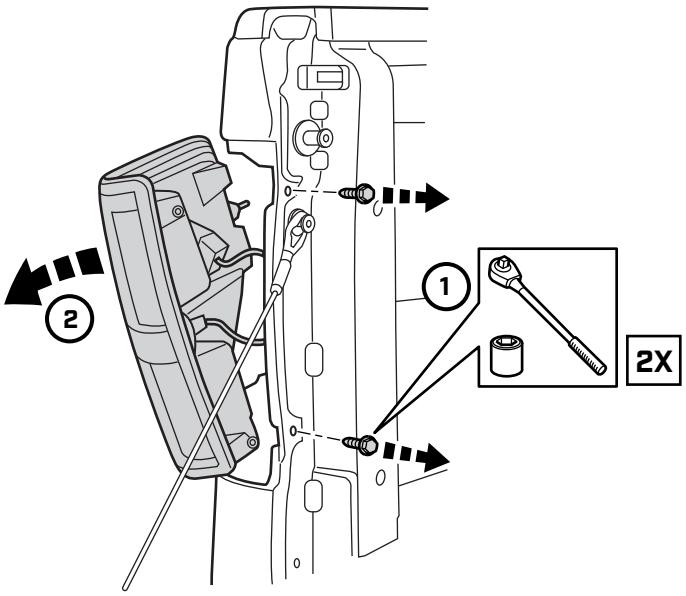

STEP 51

Route the connector harness up towards the tailight cavity

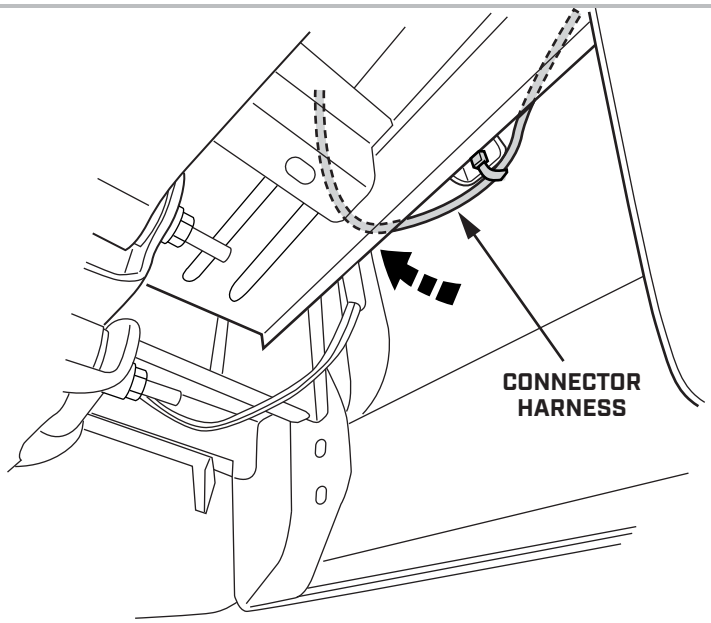

STEP 52

Carefully pull the connector harness out through the tailight cavity

Route the connector harness up and out through the hole in the side of the bed

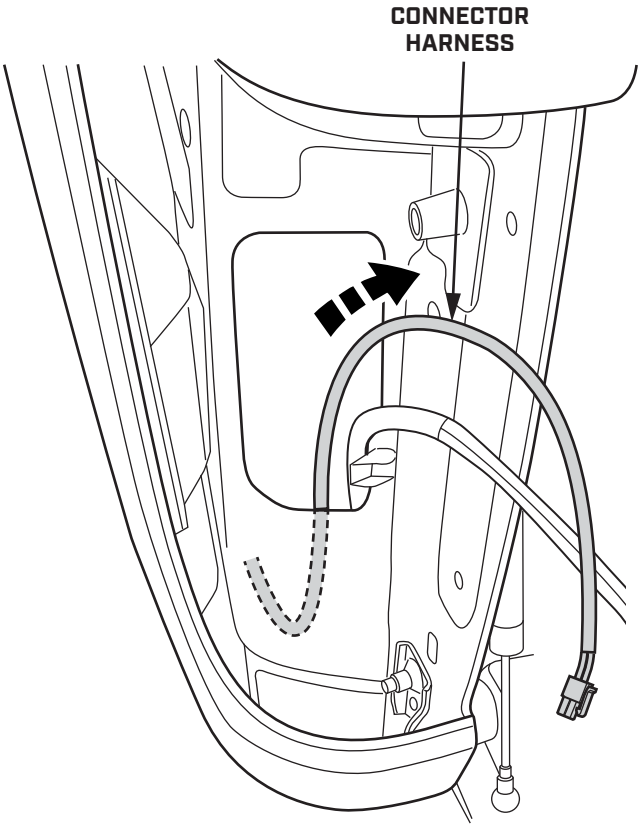

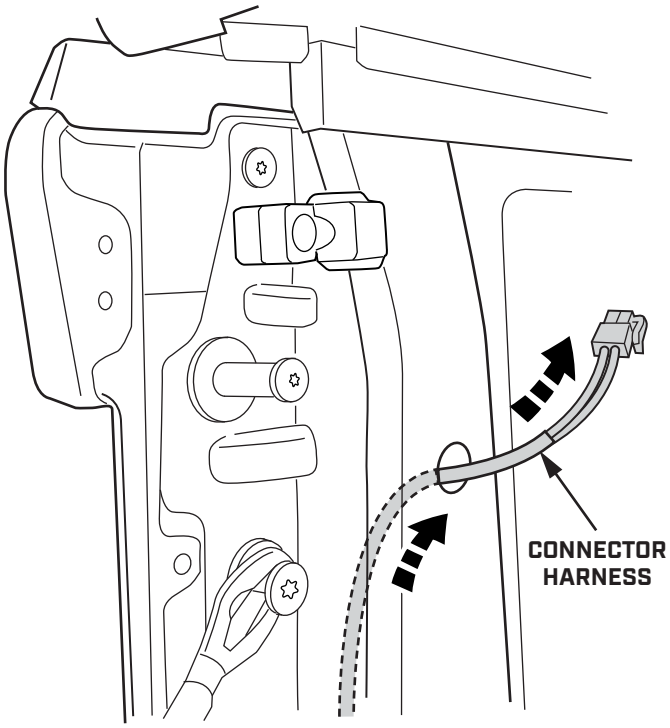

STEP 53

Locate and disconnect the third brake light extension harness from the inside back left corner of the smartcap

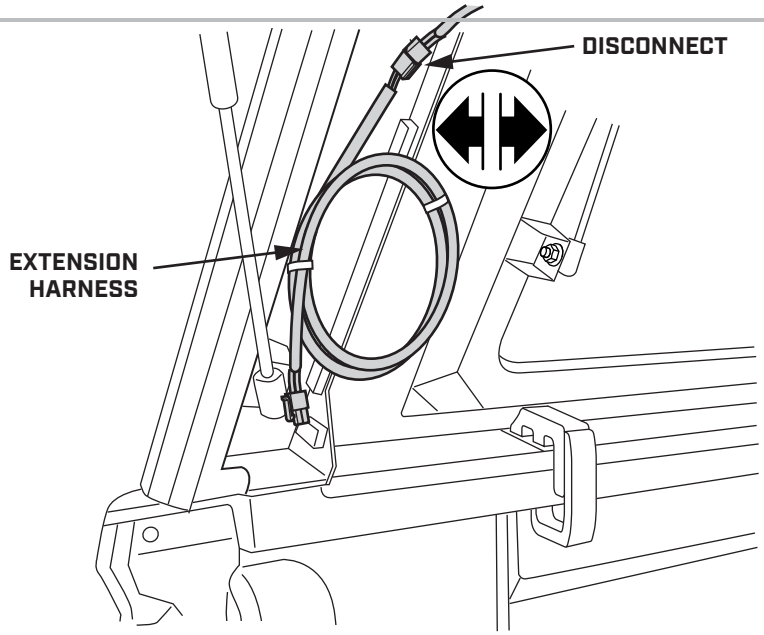

STEP 54

Connect the 2-pin plug from the connector harness to the third brake light harness

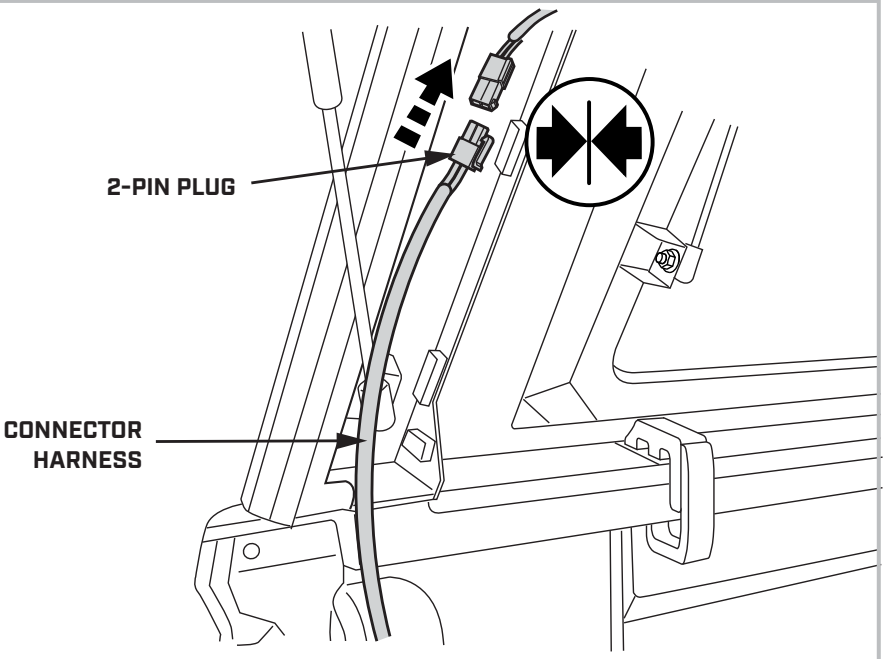

STEP 55

Apply an adhesive cable tie base to the truck bed as shown. Secure the connector harness with a cable tie

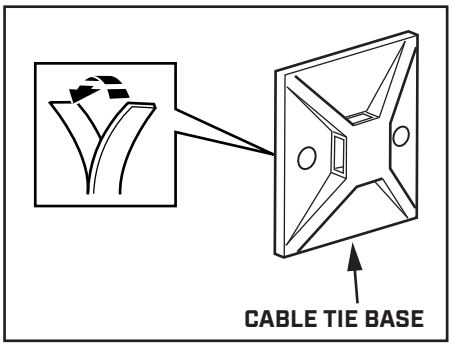

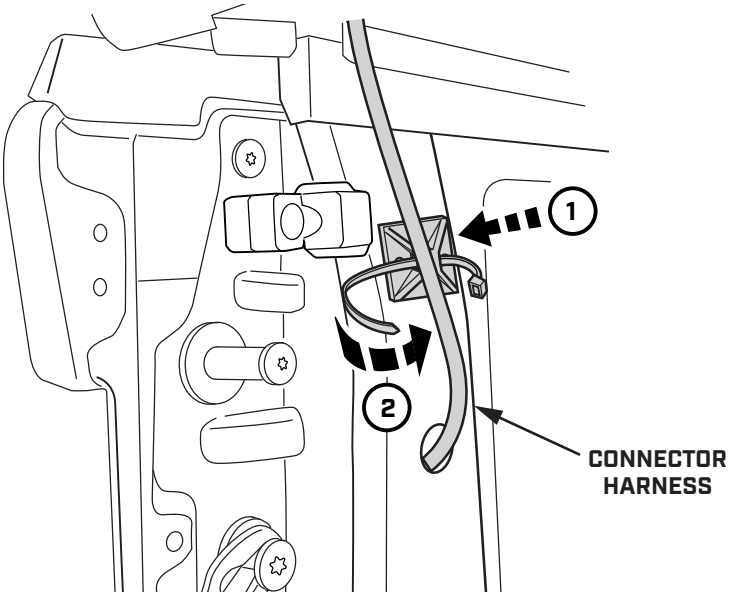

STEP 56

Reinstall the tailight assembly

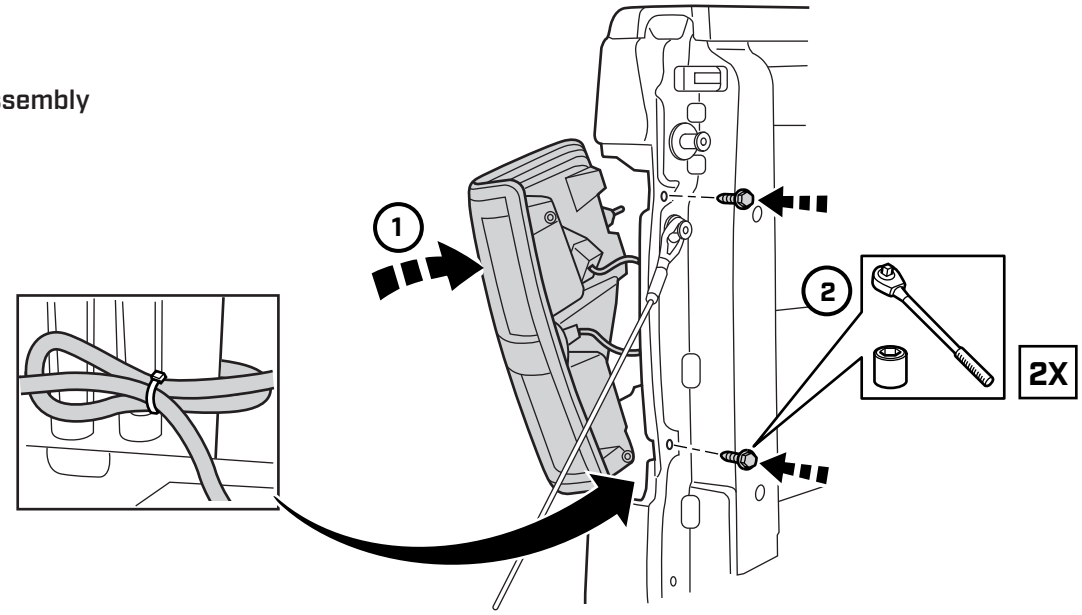

Bundle any extra harness length in the taillight cavity and secure with a cable tie

SMARTCAP

THANKS FOR YOUR PURCHASE. PLEASE LET US KNOW IF YOU HAVE ANY QUESTIONS.

SMARTCAP.COM

SUPPORT.NA@SMARTCAP.COM - NORTH AMERICA

SUPPORT.SA@SMARTCAP.COM - REST OF WORLD